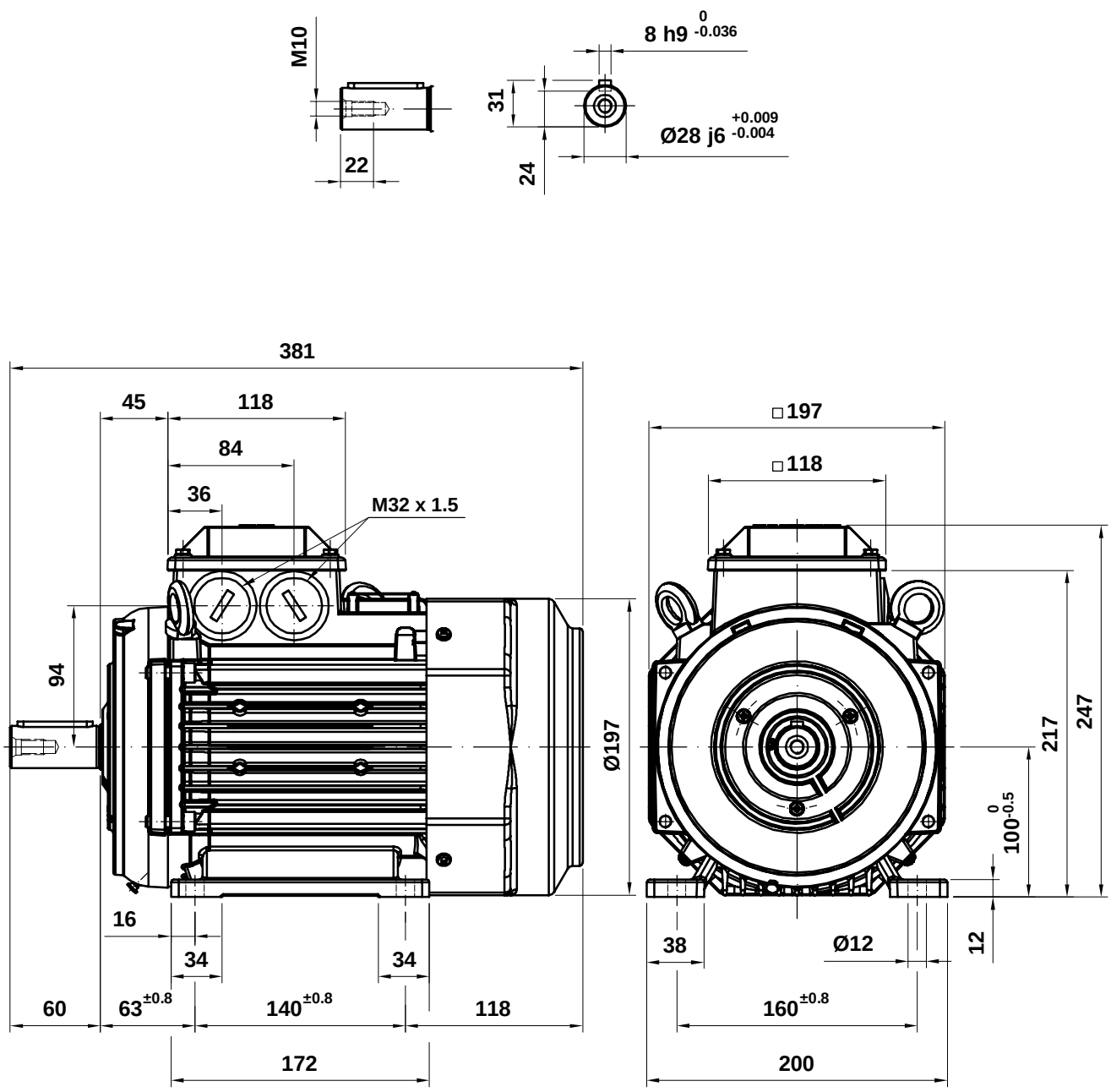

M3BP 100

Motor Dimension Print	Motor Type : M3BP 100	Document Nº : 3GZE 500 100-905

Description :

Motor foot mounted IM1001/ Motor con patas IM1001

Unit : Discrete Automation & Motion - Fábrica Motores	Issued by : ERM / L. Moreno	Replaces :
Date : 2012-03-15	Approved by : ERM / G. Blanes	Replaced by :

Asea Brown Boveri, S.A.

Customer Reference :

ABB